SP DISCUSSION PAPER NO. 9907

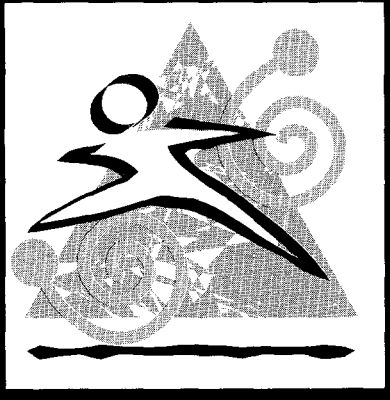

Collecting and Transferring Pension Contributions

Rafael Rofman
Gustavo Demarco

February 1999

Social Protection
LABOR MARKETS, PENSIONS, SOCIAL ASSISTANCE
THE WORLD BANK

Table of Contents

Collecting and transferring pension contributions

Rafael Rofman and Gustavo Demarco[1]

Collecting social security contributions is an important operational issue in all types of pension system. Many regimes are plagued by poor compliance and weak, inefficient administration. Some countries have tried to introduce an automatic incentive to contribute by moving systems closer to 'actuarial fairness', where pension benefits are more strictly related to individual contributions. Examples include the systems of individual accounts introduced in a range of countries in Latin America and Eastern Europe. But in these regimes, collecting and transferring contributions is a more complex process.

This paper considers different aspects of the process of collecting pension contributions. In the following Section, we describe the most serious problems affecting collection systems in several countries. Section 2 presents the conceptual relationships between alternative pension-system models and collection systems. Section 3 deals with the differences between centralised and decentralised collection systems and their advantages and disadvantages. Section 4 looks at operational issues. Section 5 compares experience of collection systems in a range of different countries. Section 6 looks at problems of regulation and supervision, while the final section concludes.

---

1 Analysis and research unit, Nacion AFJP and benefits and insurance manager, pension fund supervision agency respectively. This paper forms part of the World Bank Pension Reform Primer, a comprehensive toolkit for policy makers on designing and implementing pension reforms.

1. The problems of pension contribution collection systems

A central aim of pension reforms has often been to improve poor rates of collection of contributions. Studying these reform efforts is therefore a useful way of identifying the most frequent problems with collection, such as compliance incentives and weaknesses in administrative institutions and procedures.

1.1 Compliance incentives

Even the best systems of collection and control will fail if they do not have the support of participants, both employers and employees. Incentives to comply are seriously lacking in many pension systems. This can be either because the financial and administrative burden of compliance is heavy or because contributions are high relative to benefits (for example, where governments have difficulty in meeting their obligations).

High contribution rates are a common problem. Total contributions, including levies on both employer and employee, often exceed 25 per cent of gross earnings. Adding health insurance and other contributory schemes (such as unemployment), they can reach 50 per cent.

These high rates are not only a concern because of their effects on compliance. They may also reduce incentives for employers to hire labour and individuals' incentives to work. They will also increase the incentive to evade contributions by working in the informal sector.

In many countries, the structure of contributions is also regressive. In France, for example, the employer contribution rate is 46 per cent, payable from the first Franc of earnings. But once earnings are just 30 per cent above the

average, no further contribution is levied.[2] Disincentives are therefore particularly strong for low-paid workers and their (potential) employers.

However, cutting overall contribution rates is very expensive. It also conflicts with the demands on the system, not least from an ageing population and earlier retirement. In countries that have reduced contribution rates, there has been little evidence of increases in compliance. In Argentina, for example, a progressive reduction in employers' contributions of 15 per cent of gross wages since 1995 has not increased collection rates.

The lack of incentives to contribute should be addressed by any pension reform. One strategy is to introduce a closer link between contributions and benefits, both in the financing of benefits and the level of pension for the individual. A part of this reform might be to shift the financing of minimum pensions or social assistance for the elderly to the general budget.

1.2 *Administrative incentives*

A second incentive issue is encouraging collection agencies to administer the system effectively. The agencies can be given targets or rewarded with a percentage of the fines they impose. But targets can often lead to limited and rigid objectives, such as making no further effort to increase compliance once (relatively low) targets are achieved. Distribution of fines can also distort incentives, encouraging punitive rather than preventive strategies. Extreme caution is also required to avoid corruption.

1.3 *Weakness of the collecting system*

A number of weaknesses are common to collecting systems.

---

[2] Eight other OECD countries – Austria, Canada, Germany, Greece, Ireland, Luxembourg, Spain and the United States – have such limits. See OECD (1997), Table 24. Chapter 5 of the OECD report provides a comprehensive discussion of the effect of social security contributions on labour markets.

- First, **a poor system for identifying employers and employees**. Many countries do not have a unique identification system for social security. National identification numbers, internal numbers generated by regional offices, tax identification numbers and others often confuse administration and prevent the development of efficient, streamlined procedures. They can also allow some employers and employees to slip through the collection net.
- Secondly, **poor use of technology.** Employer reports filed and stored on paper forms are still common. Even when collection agencies require electronic filing from medium and large employers, often no proper database is built. Such a database could be used to certify compliance or accrual of benefit rights. Often, workers about to retire are required to take proof of past contributions to social security agencies. This causes particular problems in countries with a mobile workforce.
- Thirdly, **frequency of reports.** Even when employer reports are properly processed and stored, it is common to find that they are only required annually or every six months. Data for monthly payments are often poor.
- Finally, **multiple collecting agencies**. Taxation, social security and health-insurance administration are often separated. Employers are required to file multiple declarations. They contain much the same information, and may also duplicate other statutory reports, such as returns to statistical offices. This is considerable burden, discouraging compliance. Furthermore, it is also usually impossible to cross-check the different reports, because of differences in formats *etc.*

1.4 Weakness in control processes

The most common weaknesses of control systems are inadequate or unsound information; lack of data-processing capacity, such as poor information technology; unreliable systems for generating 'alarms'; and exposure to corruption.

These problems need to be addressed together, but usually they evolve independently. For example, data are seldom checked for consistency or incorporated in electronic databases. Errors or mis-reporting are usually identified by administrators' intuition rather than predefined rules. A simple set of indicators can be compared across companies and across time for a single company. These might include the ratio of contribution payments to the total payroll or to the number of employees, or the ratio of contributions to income tax deductions. Such indicators can often spot many deliberate and unintentional errors. Of course, an important prerequisite for such checks is effective use of information technology.

2. Collecting contributions in different pension models

The two most important characteristics of different pension systems are the structure of pension benefits and the way they are financed. In defined-benefit schemes, the level of the pension is independent of the amount contributed. It is usually either a flat-rate payment or related to some measure of earnings.[3] In defined-contribution plans, the pension depends on the level of individual contributions and the returns they earn. Actual systems tend to combine elements of both of these textbook models.[4]

The second criterion distinguishes pay-as-you-go plans (where current contributions pay for current benefits) from funded schemes (where pensions are paid from a fund built up from past contributions). Again, many schemes combine elements of both. For example, a modest fund might be used to meet short-term obligations or to prepare for adverse future demographic developments. In some funded systems, assets are primarily held in government securities. This is

---

[3] In 14 countries with public sector, defined-benefit plans, the pension is related to average earnings, in 49, to 'final' earnings (for example, the last five years) and in 17, to 'best' earnings (for example, the highest ten years). See Disney and Whitehouse (1999), Tables 1 and 2.

[4] See Bodie, Marcus and Merton (1988) and Disney and Whitehouse (1996) for a discussion of the two types of plan.

backdoor pay-as-you-go financing, since it allows the public sector to run a larger deficit than otherwise possible.

While there are common themes, the problems and solutions in collection systems are different in each model.

2.1 *Defined-benefit, pay-as-you-go schemes*

Pay-as-you-go schemes, with some kind of defined-benefit formula, are the most common pension system around the world. Contributions are usually collected from employers and employees and sometimes from the government itself. Typically, some minimum period of contribution is required to qualify for pension benefits and the pension level is related to individual earnings. However, formulae are often highly non-linear, with progressive accrual schedules, minimum and maximum pensions, adjustments depending on the age at which the pension is drawn *etc.*[5] These systems impose substantial information requirements, including individuals' earnings' and contributions' history. In many countries, this information is only gathered at the time of retirement. During the working life, contributions are collected periodically from employers (including employees' contributions withheld from earrings). A periodic report on individual workers is also usually required, but often the information accumulates unused.

These collection systems tend to be administratively cheap, but evasion can be widespread with little means of reducing it. They can also impose serious burdens on retirees claiming benefits. Finally, the lack of readily accessible administrative records puts the onus of proof of past contributions and earnings onto the individual.

---

5 See Disney and Whitehouse (1999), Tables 1, 2 and 3, and Figure 13.

2.2 *Defined-contribution, pay-as-you-go schemes*

These schemes, called 'notional accounts' or 'notional defined-contribution plans', are not common. (Examples are Latvia, Poland and Sweden.[6]) They mimic a defined-contribution scheme by defining benefits as the accumulation of contributions and notional, legislatively defined 'interest'. Annuity rates, too, are set administratively. So, although they are superficially similar to a defined-contribution scheme, they are just a form of pay-as-you-go, defined-benefit plan.[7]

Unlike the defined-benefit model, detailed information on each individual contribution must be collected and maintained. In theory, this could work like many defined-benefit schemes, with information on each worker's contributions' history gathered at the time of retirement. However, such a scheme would be fragile: differences between actual contributions and those declared by the worker at retirement could cause problems with such a system.

The few proposed or operational notional-accounts schemes are run by a single administrative institution. Collection and individual record-keeping are therefore centralised. The system is more complex than a defined-benefit plan to operate. Individual accounts must be maintained, with regular credits of contributions and implicit interest.

2.3 *Defined-benefit, funded schemes*

Defined-benefit, funded pensions are usually employer-sponsored, voluntary plans. They are a common feature of many developed countries, such as Ireland, Japan, the Netherlands, the United Kingdom and the United States.

The collection system is relatively simple because employers run the plans and there is no reason to set up a centralised scheme. Employers need to hold individual members' contributions' and earnings' records.

---

6 On which, see Fox (1999), Gora and Rutkowski (1998) and Sunden (1999) respectively.

First, actuarial projections of workers' accrued benefits and so, the scheme's finances are usually required. Any shortfalls must then be made good, and many countries also require surpluses to be distributed.[8]

Secondly, schemes need individual records for employees who leave. Originally, many plans simply returned the employee's contributions (with or without interest). More commonly now, employees are able to transfer their accumulated rights (generated from both employer and employee contributions) to their new employer's plan.[9]

2.4 *Defined-contribution, funded schemes*

Defined-contribution, funded schemes have become increasingly common. Nine countries in Latin America and five in Europe have now implemented or legislated reforms introducing individual pension accounts.[10,11] All of these schemes maintain some element of defined-benefit, pay-as-you-go provision.[12] This 'first pillar' can be means-tested or a minimum pension guarantee, flat-rate or earnings-related.

The 'second pillar', the defined-contribution funded scheme, operates as a long-term savings plan. Contributions are received by the pension funds periodically, and credited to individuals' accounts. The funds are invested in financial assets, and the returns on these assets added to the individual accounts.

---

7 See Disney and Shwarz (1999) and World Bank (1999) for a detailed discussion.

8 See Laboul (1998) for a detailed discussion.

9 In the United Kingdom, for example, employers were able to return employees contributions if they left before retirement age until 1975. Until 1985, benefits had to be 'preserved' in the scheme, but they were not adjusted for inflation or earnings growth. Since 1985, they must be limited price indexed to a ceiling of 5 per cent. See Dilnot *et al.* (1994), p. 193-194.

10 See Queisser (1999) on Latin America, Palacios and Rocha (1998) on Hungary, Gora and Rutkowski (1998) on Poland, Sunden (1999) on Sweden, Whitehouse (1998) on the United Kingdom.

11 Other countries with significant defined-contribution provision include Australia, Denmark, Iceland and the United States.

12 The vast majority of these defined-contribution schemes are also voluntary for a significant part of the workforce. The old public, defined-benefit, pay-as-you-go scheme will therefore operate alongside the new plan for many years to come. See Palacios and Whitehouse (1998).

At the time of retirement, the accumulated balance can be converted to an annuity or periodic withdrawals made. Although it would be possible to create a system with a single fund, most countries have chosen competing, privately managed funds. Workers are also able to switch from one manager to another.

The informational requirements for funded plans are similar to those described for pay-as-you-go, notional accounts. However, information gathering probably needs to be more frequent in the funded system, because of fluctuations in the value of the underlying assets.

3. Centralised versus decentralised collection

Under a centralised system, a public agency is responsible for collecting contributions and distributing them to different agencies or funds. To do this accurately, the agency needs to identify each individual worker and the amount contributed. In a decentralised system, collection is the responsibility of each agency or pension fund, eliminating the intermediate 'clearing house'. In practice, there is a spectrum of options between these polar extremes.

The case for a centralised scheme in a pay-as-you-go pension system is clear. The single, central pension agency can obviously be responsible for collection as well. Nevertheless, it is important to consider any other welfare programmes, such as health insurance, family allowances, unemployment insurance *etc.* at the same time. If these programmes are also centrally managed, but by a separate institution from the pension system, and also financed through payroll taxes, then either a centralised or decentralised option might be appropriate. A single agency could collect contributions and then distribute the revenue among the different agencies, or the contributions for each programme could be collected by each responsible institution. The choice should be based on efficiency, security and cost. We discuss ten different important factors.

3.1 *Economies of scale*

If more than one pension fund or welfare agency is entitled to revenues from payroll taxes, then economies of scale become important. Decentralised collection duplicates administrative structures. But if an efficient banking system can be used for collection, then there is no reason why costs will be substantially higher than a centralised system.

A second potential source of economies of scale is combining the collection of contributions and taxes. The bases for personal income taxes and social security contributions are often similar.[13] Combining the two processes can reduce duplication.

3.2 *Efficiency of existing collection agencies*

Inefficient collection and administrative procedures of existing agencies are often used to justify the creation of a new agency. New pension systems based on privately managed individual accounts require a rapid, safe collection and distribution system, both of money and data. Some countries have chosen to disband the old collection agency and authorise pension fund managers to collect contributions themselves.

3.3 *Timing and speed of transfers*

Timing of collection and speed of transfers is critical to systems based on individual accounts because of the loss of interest from the fund and the potential erosion of value through inflation if contributions are delayed. Transfers are therefore best made monthly (or whatever period is used for calculating salaries)

---

[13] Although there are often differences: in income sources covered (*e.g.* fringe benefits, investment or self-employment income), in the unit of assessment (income tax often on a family basis, social security contributions usually on individuals) and in the period of assessment (annual for income tax, sometimes monthly for social security contributions).

and should not take more than a few days from payment until they are credited to individual accounts.

A system of compensation should be developed for any delays, to be paid by employers, banks, collection agencies and pension fund managers if they are responsible. Preferably, compensation should be automatic, based on prevailing interest rates. Contributors should be informed of any compensation paid.

A decentralised model is likely to be faster than a centralised one because contributions are collected directly by agencies or pension fund managers, cutting out the 'middle man' or clearing house in between.

3.4 Control mechanisms

Although a decentralised system will probably transfer contributions more quickly, it has important regulatory and supervisory implications. Transferring contributions directly from employers to funds without the intervention of a public agency requires careful supervision. In particular, regular reporting and auditing of contribution records are necessary.

3.5 Cross controls

Centralising collection allows for cross-checks of pensions with other information, such as health insurance and personal income taxation. A single agency, responsible for all collection, can develop a single reporting system. Even if there are separate agencies, sharing information can improve compliance. However, there are a number of potential pitfalls with such co-operation.

First, there may be technical difficulties due to incompatible information technology systems. Secondly, sharing information may be illegal under privacy laws. Thirdly, there is at least the potential that overall compliance may decline. Compliance with pension and health-insurance programmes is often higher than with the personal income tax. If collection is unified and people are aware of the

cross-check, then personal income tax revenues might increase, but revenues for welfare programmes might decline. This suggests the need for caution before increasing co-operation between different agencies.

3.6 Incentives

At first sight, decentralised models appear to set efficient incentives, since the organisation responsible for collection receives the revenue. In contrast, a public agency operates under a pre-established budget, with little incentives to increase revenues. Of course, it is possible to design incentives for the agency to act more efficiently (see the discussion in Section 1.2 above) but this cannot replicate the inducements of a decentralised system.

3.7 Enforcement power

Any actor in the pension system can report evasion: workers, employers, public officials, and pension fund managers. But enforcement powers can only be assigned to a single agency. In some cases, this is the collection agency, particularly where collection is centralised in a public agency.

In countries with decentralised collection systems, there are wider options. Giving enforcement powers to a private agency involves authorising it to audit and penalise employers and employees. This is legally difficult and often impossible. One solution is to require management companies to identify non-compliance and then supply the information to the government.

3.8 Cost of the collecting scheme

A centralised scheme is in principle cheaper than a decentralised one because of economies of scale, especially if it is possible to centralise the collection of pension contributions with other social security contributions and taxes. A centralised system of collection also simplifies the payment processes. However,

competition in a decentralised model, with each collector trying to minimise costs, may compensate for the diseconomies of scale.

Social security institutions carry out a diverse range of activities. There is no particular reason why an agency that is effective at distributing and administering benefits should also be effective at collecting revenues. This argument works both ways: there is evidence that tax authorities, for example, are ineffective at distributing benefits.[14] Economies of specialisation point to separate agencies for benefit administration and contribution collection.

3.9 *Financing collection*

There is some fairness in the costs of collection being borne by the participants who benefit from the system. This occurs automatically in decentralised systems, with each managing company covering its own collection costs out of the contribution revenues. However, this need not be the case in centralised system. One solution is to deduct a fee from contribution revenues before they are distributed or to charge the managing companies. However, pricing is difficult when the agency also collects other contributions (for first-pillar pensions, health, *etc.*) or taxes, which might result in hidden cross-subsidies.

3.10 *Corruption*

Centralised collection can reduce the risk of corruption since the central set of information is shared by a number of actors in the pension system. The risk of corruption can be reduced further when 'centralised collection' is simply a set of information signals between financial institutions and the recipients of revenues. The role of the collecting agency is then merely as guarantor of the process. This

---

[14] Various studies of the earned income tax credit in the United States, for example, show a high degree of overpayment, which has been blamed on the fact that the Internal Revenue Service is not used to paying money out. See General Accounting Office (1994) and Whitehouse (1996, 1997*b*).

also avoids the spurious use of funds by the state, which was an important political issue in Argentina and Venezuela, for example.

3.11 Summary: centralised versus decentralised collection

Table 1 recapitulates the arguments presented in this Section.

Table 1. **Comparison of alternative collection systems**

Criterion	Centralised	Decentralised
Economies of scale	High	Duplication of costs
Efficiency	Traditional agencies often inefficient	New organisations with up-to-date technology can be more efficient
Timing	Lags possible	Practically instantaneous
Control mechanisms	Simple	Complex
Cross controls	Taxation, other contributions	None
Incentives	Fiscal	Profitability
Enforcement power	Absolute	Indirect or non-existent
Costs	Economies of scale but monopoly	Competition but diseconomies of scale
Financing	State or pension funds (but pricing problems)	Pension funds
Transparency	Sharing information reduces corruption risk	Potential for inappropriate use of privileged information

4. Operational issues in a centralising collection

Countries with multipillar pension systems and decentralised collection can have up to five different institutions responsible for levying contributions and taxes. These are the social security administration (first pillar pensions and other programmes), the health fund administration, private pension funds, and the tax and customs authorities (income taxes, value-added tax, customs and excise duties).

4.1 Alternative strategies for centralisation

Collection may be centralised in different ways, depending on the contributions to be centralised, on the agency to be responsible for collection, and on the existence of collecting intermediaries.

Contributions to be centralised

If centralisation is limited to pension contributions, implementation will be much simpler. But this loses potential advantages, such as economies of scale and the ability to cross-checks with other levies. If it were planned to include taxation in the unified collection system, it would make most sense to assign contribution collection to the tax agency, or to create a new, unified agency.

Agency responsible for collecting

A starting point in making the choice between the tax authority and the social security administration as the responsible agency is to assess their relative efficiency through aggregate statistical information. This might include the absolute level and trend in revenues collected, the level and trend in rates of evasion, and administrative costs. Secondly, their collection and control procedures can be assessed, including comparisons of the role of banking intermediaries, the degree of automation in administrative procedures, the methods for identifying contributors or taxpayers. Often, the tax authority is believed to be more efficient, but this may not stand up to such detailed analysis.

The creation of a new agency through merger might be a more palatable alternative than choosing between the two. This is easiest to achieve when the social security administration clearly differentiates between collection of contributions and disbursement of benefits. The greatest advantage will be obtained if tax and customs are also rolled into this new institution. The division of responsibilities in the centralised and decentralised models is shown in Table 2. The radical reforms needed to implement the centralised model imply enormous functional, organisational and cultural changes. This suggests that gradual change might be the best approach.

Table 2. **Division of responsibilities between different agencies in centralised and decentralised models**

Decentralised	Centralised
Social security administration	Social security administration
Administering first-pillar pensions and other social security benefits	Administering first-pillar pensions and other social security benefits
Collecting contributions for public pensions and other benefits	
Health fund administration	Health fund administration
Operating health services	Operating health services
Collecting health contributions	
Pension funds managers	Pension funds managers
Administering second-pillar pensions	Administering second-pillar pensions
Collecting second-pillar pension contributions	
Tax authority	Unified collection authority
Collecting personal and corporate income taxes, VAT and other taxes and excises	Collecting social security contributions (including first- and second-pillar pensions, health and other benefits), income taxes, VAT and other taxes and excises, and customs duties
	Distributing revenues and information to social security administration, health fund administration, pension funds managers and the treasury
Customs authority	
Collecting customs duties	

4.2 *A gradual strategy for centralised collection*

The administrative upheaval of centralisation and its financial and political cost point to the benefits of gradualism. This could begin with centralising processes, such as identifying employers and employees, unifying social security and tax forms and co-ordinating control and collection procedures with centralisation of administrative structures occurring last. This only works if operational centralisation does not need unified decision-making at the top. In practice, many of the benefits of centralisation come from unifying procedures, not from unifying institutions.

Identification of employers

Employers are usually required to register and obtain several identification numbers when they open for business. These numbers (including those provided by statistical offices, local and national tax authorities, pension systems, health systems and others) are often incompatible and updating of records is not always efficient. A unique standard for identification numbers for all these purposes is a first, necessary step.

Identification of employees

A single system for identifying workers is also necessary. This requires the unification of existing systems, probably involving a number of agencies, and a mechanism for issuing numbers to new-borns or labour-market entrants. Efforts should be co-ordinated with tax authorities if they already have (or plan to develop) a taxpayer identification system, as requirements will overlap.

In the short-run, identification of contributors is useful even if no radical reforms to the system's architecture are planned and a pay-as-you-go scheme is left unchanged. This will allow better verification of contribution conditions and earnings records for defined-benefit plans. Employers can be required to provide periodic lists of the identification numbers of their employees and their earnings.

Identification systems are a vital prerequisite for improving administrative processes, introducing or updating information technology and developing databases of contributions and earnings records.

Unification of payment forms for different social security contributions

In some countries, payments of different social contributions can be made under different procedures. In Argentina, the pension system administrators used to collect payment information in paper form, which was different from the

information provided to administrators of the health system and other social security components.

Procedures for actual payment of contributions vary between countries. Usually, this is either at the social security agency's offices, through the banking system or through a centralised payment system. Whichever is adopted, developing a standard for payments and information transfers is critical for successful centralisation.

Unification of payment forms for income taxes and social security contributions

A completely different approach underlies the design and management of social security contributions and personal income taxes. They are rarely consistent and cross-checks are often impossible. Unifying the payment forms used by the social security administration and the tax authority should significantly enhance efficiency. Employers should include all payments in a unified form, and banks or collecting agencies could then transfer the funds to the corresponding agency. This requires the design of a common payment form and the design of routines of centralised collection.

Design of alternative procedures of control

Together with the unification of payments, control procedures should be redesigned and improved to include automatic cross-controls and risk analysis. Not all control processes need to be immediately centralised. Inspectors from the social security administration and the tax authority should be retrained to manage the new control tools.

Design a centralised structure for contribution and taxes collection

Once all payments are centralised and new control routines are set in place, a new collecting structure can be created, by merging the collection areas of existing

agencies. This requires a new functional structure, the transfer of the labour force and of files and documents.

5. Selected international experiences

We investigate collecting systems in eight different countries. First, we compare Chile and Argentina, which are good examples of a decentralised and a centralised system respectively. Secondly, we examine the systems of four European countries: Hungary, Poland, Sweden and the United Kingdom. We then look at the case for centralisation in Georgia, the lessons of the failed reform in Venezuela on the importance of collection procedures and the administrative aspects of reform proposals in the United States.

5.1 Decentralised collection: the example of Chile

Chile pioneered a funded, defined-contribution pension system as a substitute for a pay-as-you-go defined-benefit scheme in 1980-81. Chile's 'first-pillar' pensions are limited to recognition bonds for accrued pension rights and a minimum benefit guarantee. In both cases, the payment is a one-off transfer from the general government budget to individual accounts. This limited first pillar offered the ideal institutional setting for fully decentralised collection of pension contributions. Fund management companies, known as AFPs (*administrados de fondos de pensiones*), are responsible for collecting contributions from their members. Employers are required to identify each worker's choice of pension fund and make appropriate transfers monthly. This complex task is simplified by intensive use of information technology. Enforcement powers remain with the government, although the pension funds may sue employers for unpaid contributions.

5.2 *Centralised collection: the example of Argentina*

Argentina's reformed system, introduced in 1993-94, includes a more substantial pay-as-you-go, defined-benefit first pillar than Chile's. Argentina opted for a fully centralised collection system, which, by 1998, covers pensions, health, other welfare benefits and taxes. Collection is assigned to the tax authority, known as the federal public revenue administration, or AFIP. Initially, the agency contracted a private company to operate the system. But, as of August 1998, the AFIP itself took over. Employers must make monthly payments and reports to the agency, indicating individual contributions for each programme. This process is expedited with specially designed, freely distributed software. Both payments and reports can be filed in almost any financial institution, at no cost to the contributor. The AFIP must transfer contributions and information to pension fund managers within 48 hours of receipt. Unlike Chile, pension fund managers have no enforcement responsibility, which lies solely with the AFIP.

5.3 *The Chilean and Argentine systems compared*

There is no clear evidence regarding whether Chile's decentralised model or Argentina's centralised system is more efficient. Compliance seems to be somewhat higher in Chile. But this may reflect a stronger tradition of tax compliance in Chile and the narrower net of compulsory coverage. For example, the self-employed contribute only voluntarily in Chile, while in Argentina, this group with high rates of non-compliance is compelled to contribute.

Again, comparisons of costs give no clear answers. Chile's AFPs generally use commercial banks from the same economic group to collect contributions. This disguises costs as there is no observable market price, although one AFP which is not linked to a bank pays less than 0.1 per cent of total contributions for collection services. The system in Argentina appears to be more expensive. The figures are not public, but it has been estimated that the AFIP paid approximately $100m a year to the private company running the system. The total revenues raised,

including all taxes and contributions, amounted to around $20bn, giving a cost of 0.5 per cent of revenues. Higher costs in Argentina can partly be explained by the single contribution, whereas in Chile, employers make a number of different payments and reports. Secondly, the Argentine tax authority carries out a wider range of services, such as enrolment in the system and enforcement. However, a cost that appears as much as five times higher than Chile is hard to justify. There has been controversy over the possibility of overpayment for the service.

The Figure shows the flow of funds in Chile and Argentina.

Flow of Pension Fund Affiliates Contributions in Argentina

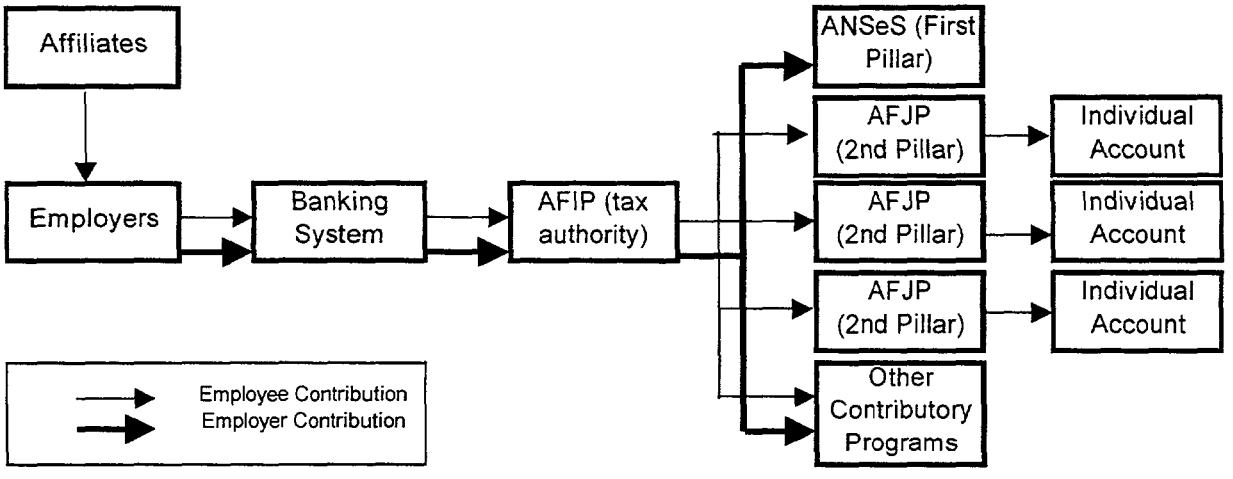

Flow of Pension Fund Affiliates Contributions in Chile

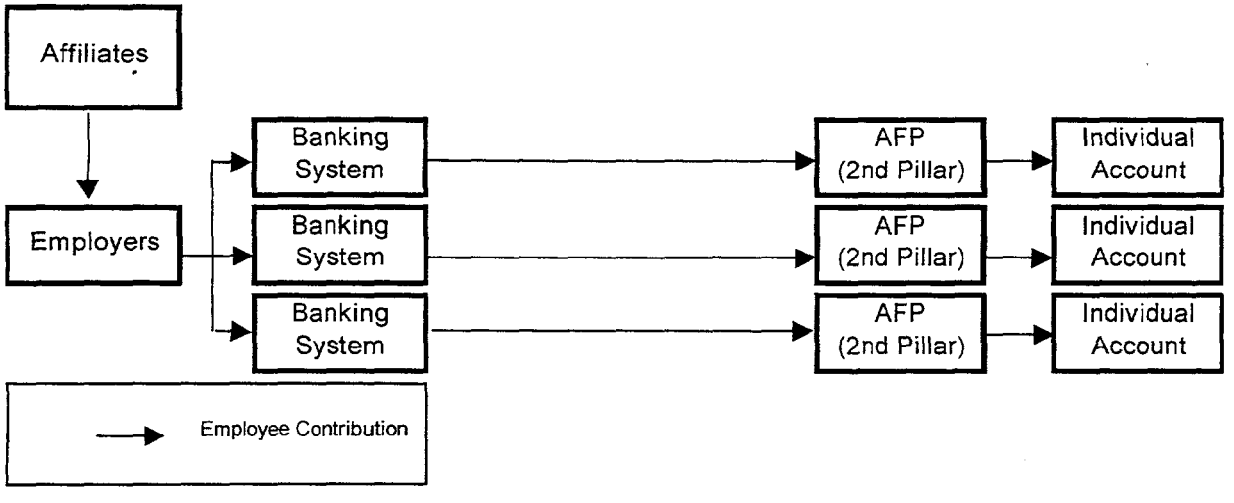

5.4 *Collecting contributions in four European systems*

The choice of collection system in four European countries – Hungary, Poland, Sweden and the United Kingdom[15] – confirms the importance both of

[15] On Hungary, see Palacios and Rocha (1998), on Poland, Gora and Rutkowski (1998), on Sweden, Sunden (1999) and on the United Kingdom, Whitehouse (1998).

existing institutional arrangements and the political context that were found in Argentina and Chile.

All these countries have maintained a significant first pillar. In Hungary, this is a traditional pay-as-you-go, earnings-related scheme. Poland envisages a first pillar based on notional accounts. When the new system matures, it is planned that this first pillar and the funded, defined-contribution pillar will provide about half of the total pension each. Sweden's scheme is based almost wholly on notional accounts, with only a tiny funded component. The first pillar in the United Kingdom, the basic state pension, is a flat-rate benefit, currently worth around 15 per cent of average earnings.

Sweden

The national social insurance board was historically responsible for collecting contributions. In 1975 a gradual transfer of this tax to the national tax board was begun, which was completed in 1985. The aim was to facilitate cross-checking of data and limit under-reporting. The enforcement systems for taxation and contributions are now fully integrated. A combination of efficient collection procedures and a strong compliance culture results in very low evasion of both taxes and contributions.

Hungary

At the other extreme, the tax authority cannot collect Hungary's social security contributions and there is a powerful restriction on cross-checking between tax and contribution data. This prohibition, enforced by the constitutional court, is designed to protect citizens' privacy. As a result, compliance is arduous. Employers pay contributions directly to pension funds and report to them. But they also have to provide information to a central registry, run by the pension fund supervisory agency.

Poland

Collection of social security contributions (including health) will be administered by the national social security institution, known as ZUS. This agency will then transfer funds and data to pension funds. Some administrative problems might result because employers will still file reports on paper at ZUS offices. The collection of social security contributions will remain totally separate from tax administration.

United Kingdom

The United Kingdom's pension system is complicated because employees can be covered by a number of different forms of second-pillar pensions. These include employer-sponsored defined-benefit plans, employer-sponsored defined-contribution plans, the state-earnings related pension (a defined-benefit public scheme, known by its acronym, SERPS) or personal pensions, which are individual defined-contribution accounts.

Employer plans that promise a minimum standard of benefits can 'contract out' of the SERPS scheme. Both employers and employees then pay a lower rate of social security contribution. (This is called the contracted-out rebate.) The employer is responsible for paying both employer and employee contributions into the pension fund.

In the case of personal pensions, the contributions agency collects contributions at the same rate as an individual covered by SERPS. The contracted-out rebate is then transferred in the month after the end of the fiscal year to the individual's chosen pension fund. There is an additional payment to people in personal pensions to reflect the loss of interest on the contributions as the government holds them for an average of 6½ months.

The tax authority, the Inland Revenue, has long collected most (95 per cent) social security contributions on behalf of the contributions agency. The two

authorities have also worked closely in the past to simplify the administrative burden on small businesses (see also the discussion of Argentina's efforts in this area in Section 5.9, below).[16] The March 1998 budget proposed that the Inland Revenue should take over the contributions agency's collection responsibilities from April 1999 and that contributions policy issues should be transferred from the Department of Social Security to the Treasury. Social security payments will continue to be run by a separate benefits agency. Recent legislation permitted information sharing between the tax authority and the benefits agency for the first time and the legislation to merge the collection authorities includes provisions to allow the pooling and cross-checking of different information sources.[17]

5.5 *Implementing a centralised system in Argentina*

Before the Argentine pension reform, workers were not identified by a special number, although there was a database containing a partial history of individual contributions. The government created a unified social security contribution (CUSS) in 1992. This was collected by banks under the supervision of the social security agency (ANSES). The most important element of the CUSS reform was the centralisation of health insurance contributions, which had previously been collected by a large number of non-governmental organisations, or *obras sociales*, owned by trade unions.

Contributions could not be associated with individuals in this system. So the two main problems when the pension reform was introduced were unifying all contributions and distributing revenues among the different agencies administering each component of the welfare system. The first was easy to achieve, but the second was solved indirectly, using coefficients based on the *obras*

---

16 An evaluation of the impact of closer co-operation on small businesses can be found in Griffith and Thomas (1998).

17 See Whitehouse (1997*a*) for a discussion of controversies over information sharing. Department of Social Security (1998) describes the legislation.

sociales' declarations of previous revenues. This speeded the CUSS unification process, which took only a few months. There was no special budget for this programme.

The major reform of the collection system occurred in July 1994, when the new pension system was introduced. In just nine months (October 1993 to July 1994), workers were identified individually, collecting agencies were merged, and a new information-technology system developed (although this built on the existing information network between ANSES and the banks). The information-technology requirements were contracted out to a 'transitory union of enterprises' (UTE) including American computer giant IBM and a bank cards system (BANELCO). They also administered the system for more than four years. Unfortunately, there is no public information on the costs of the rapid implementation of the new system.

5.6 Centralising collection in Georgia: a proposal for a gradual approach

The united fund of social protection and medical insurance in Georgia includes both contributions collection and pension benefit administration in its responsibilities. The system, in common with many other pay-as-you-go regimes, suffers from widespread evasion of contributions, low pension levels and a persistent deficit.

The government sees centralising collection and identifying contributors as alternative ways of improving compliance. The central considerations are the need for overall pension reform, the timing of centralisation and the choice of the united fund or the tax authority to collect contributions. Some factors in the relative efficiency of these two agencies are shown in Table 4.

Table 4. **Centralising collection in Georgia: the social security or tax administration?**

Issue	United fund	Tax authority
Role of financial intermediaries	Banks receive contributions and transfer them to the united fund	Banks receive taxes and transfer them to the tax authority
Administrative procedures	Manual	Predominantly manual
Information technology	Very limited, mainly for statistics. No administrative database	Incipient, mainly databases of institutional information of principal ('of fiscal interest') contributors.
Identification of contributors	No identification of employees Identification of employers by manual registers	System being developed to identify 70,000 contributors (enterprises). No identification of workers envisaged.
Control	Manual and non systematic Based on the quarterly declarations of payroll payments by employers	Selective Focus on enterprises of 'fiscal interest' Based on enterprises' declarations

The tax inspectorate has a slight advantage overall, but simply transferring social security contribution collection to this agency is probably not a sufficient solution to compliance problems in the short term.

The creation of a new agency through merger might be a better alternative, but obviously envisages potentially costly administrative upheaval. A gradual strategy, as outlined in Section 4.2, might be better. This should begin with identification of individual employers, then of individual employees. Thirdly, quarterly information on employees and earnings should be collected, followed by unification of income tax and social security payments. Training of staff of the united fund and the tax authority in newly-designed alternative control procedures could then be followed the organisational unification of the two collecting agencies.

5.7 *Venezuela: a lesson on the importance of the collection agency*

Collection, what at first might appear an uncontroversial, operational issue, took an important role in the Venezuelan debate on pension reform. The

government proposed a centralised social security and tax collection system as part of a move to privately managed pension accounts and other social security reforms. They proposed that the existing tax authority should be the single collection agency. The so-called 'unified collector' received more attention in Congress and in public debate than any other reform proposal. The government took a strong stand on this proposal, but the public's negative opinion of the efficiency and transparency of the tax authority cast suspicion on the whole reform. The government replaced the concept of the unified collector with a system centralising only the information technology of collection without the transfer of funds. Unfortunately, this about turn was too late and public opinion was firmly set against the whole reform.

5.8 *United States*

The debate over social security reform in the United States has become both politicised and polarised, with operational issues so far taking a minor role. Many reform proposals, including that of the National Commission on Retirement Policy (1998), recommend that a bureau within the social security administration would be responsible for record-keeping, collection and transfer. Others, such as the Committee for Economic Development (1997), are wary both of expanding the bureaucracy and the difficulty of insulating contributions 'from the influence of budgetary juggling'.[18] The Heritage Foundation (Harris, 1998) has recommended a decentralised model, drawing on international experience. The most detailed investigation of operational issues is that of the Employee Benefits Research Institute (Olsen and Salisbury, 1998). Although they claim 'neither to dissuade the advocates nor support the critics' of individual accounts, they argue that reform would be complex for participants to understand and difficult to administer.

---

[18] This is a rational fear. When the budgetary impasse between the administration and Congress led the latter to refuse to raise the federal debt limit, the government used federal

5.9 *Encouraging compliance by small businesses in Argentina*

The Argentine social security system has wide legal coverage, but there are serious problems in ensuring all those legally obliged to contribute actually do so. Evasion is particularly significant among the self-employed, especially those with lower incomes.

Non-compliance may partly be explained by high fixed compliance costs, including registration, payments, inspections, book-keeping, professional advice, *etc.* To ease this administrative burden, a new system is being developed to unify the social security contributions, income taxes and VAT and simplify procedures. To contribute through this system, gross annual revenues must not exceed $144,000. The amount of the 'single contribution' is determined by a tariff, which has seven categories based on annual gross incomes and the number of employees. The single contribution is collected by the revenue authority (the AFIP) and then transferred to the treasury, the social security administration (ANSES) or to the private pension funds (AFJPs) as appropriate.

6. Supervision

The choice of collection system has important implications for supervision and regulation of the pension system. This depends on whether the pension scheme is a multipillar regime involving individual accounts or wholly a public, defined-benefit system, whether tax and social security collection are unified, and whether a centralised or decentralised model is adopted.

If the pension scheme remains wholly in the public sector, supervision of collection is usually the sole preserve of the collection agency. However, there can be cross-checks in centralised systems between different social security and welfare contributions or between contributions and personal income taxes.

---

workers' funds from the Thrift Savings Plan (a defined-contribution scheme) to meet its liabilities and avoid defaulting on the national debt.

In multipillar systems, supervision of collection is more complex, consisting of three stages: collection of contributions from employers, transfer of funds to pension fund managers, and distribution by the pension fund managers into individual accounts.

6.1 *Supervision of centralised collection in multipillar systems*

The supervision of centralised collection systems run by a public-sector agency is mainly concerned with controlling evasion and distributing the correct funds at the right time to pension funds and social security agencies. Although supervision is still a major task, it is greatly simplified by the centralised pool of information in the collecting agency.

6.2 *Supervision of decentralised collection in multipillar systems*

Supervising decentralised collection systems is a more complex, fragmented task. Multiple collecting agencies must provide regular information to the supervisory agency. On-site inspections will be needed to verify that all three stages of the collection and transfer process are carried out correctly and on time. Any opportunities to cross-check information with other sources should also be pursued.

7. Conclusions

Operational issues in the collection and transfer of pension contributions play an important part in the efficiency and equity of pension reform. Although the structure of pension systems based on individual accounts is often predicated on a desire to increase compliance, structural reform alone is unlikely to be sufficient in combating evasion.

There is no single concept of a 'centralised' collection system. In a multipillar system, it might only involve collection of pension contributions by a single agency, or it might include the collection of all social security and welfare

contributions, or even taxation. The broader the definition of centralisation, the stronger the arguments for and against.

We have argued that centralised systems can achieve economies of scale, have stronger control mechanisms and enforcement, lower costs and greater transparency. But the benefits of centralisation also depend on the strength of financial intermediation, the availability of information technology, the effectiveness of existing collecting agencies, and the flexibility of public organisations in embracing change. We recommend centralised collection wherever institutional and administrative structures allow.

References

Bodie, Z., Marcus, A.J., and Merton, R.C. (1988), 'Defined benefit versus defined contribution pension plans: what are the real trade offs?', in Bodie, Z., Shoven, J.B. and Wise, D.A. (eds), *Pensions in the US Economy*, University of Chicago Press for National Bureau of Economic Research.

Demarco, G., and Rofman, R., with Whitehouse, E.R. (1998), 'Supervising mandatory funded pension systems: issues and challenges', Social Protection Discussion Paper no. 9816, World Bank, Washington, D.C.

Department of Social Security (1998), 'Contributions agency transfer bill published today', Press Notice no. 98/287, London.

Dilnot, A.W., Disney, R.F., Johnson, P.G. and Whitehouse, E.R. (1994), *Pensions Policy in the UK: An Economic Analysis,* Institute for Fiscal Studies, London.

Disney, R.F. and Schwarz, A. (1999), 'Notional accounts: microeconomic and macroeconomic aspects', Social Protection Discussion Paper, forthcoming, World Bank, Washington, D.C.

— and Whitehouse, E.R. (1996), 'What are occupational pension entitlements worth in Britain?', *Economica,* vol. 63, pp. 213-238.

— and — (1999), 'Pension plans and retirement incentives', Social Protection Discussion Paper, forthcoming, World Bank, Washington, D.C.

Fox, L. (1999), 'Latvia', Social Protection Discussion Paper, forthcoming, World Bank, Washington, D.C.

General Accounting Office (1994), *Earned Income Credit: Data on Non-Compliance and Illegal Alien Recipients,* United States General Accounting Office, Washington, D.C.

Gora, M. and Rutkowski, M. (1998), 'The quest for pension reform: Poland's *Security through Diversity*', Social Protection Discussion Paper no. 9815, World Bank, Washington, D.C.

Griffith, S. and Thomas, A. (1998), *Evaluation of the Contributions Agency and Inland Revenue Joint-Working Initiative,* In House Report no. 40, Department of Social Security, London.

Harris, D.O. (1998), 'Bold steps: Australia and other examples of social security reform', Heritage Lectures, Heritage Foundation, Washington, D.C.

Laboul, A. (1998), 'Private pension systems: regulatory policies', Ageing Working Paper no. 2.2, OECD, Paris.

National Commission on Retirement Policy (1998), *The 21st Century Retirement Security Plan,* Centre for Strategic and International Studies, Washington, D.C.

Olsen, K.A. and Salisbury, D.L. (1998), 'Individual social security accounts: issues in assessing administrative feasibility and costs', Special Report no. 34 and Issue Brief no. 203, Employee Benefits Research Institute, Washington, D.C.

Organisation for Economic Co-operation and Development (1997), *The OECD Jobs Strategy: Making Work Pay: Taxation, Benefits, Employment and Unemployment,* OECD, Paris.

Palacios, R.J. and Rocha, R. (1998), 'The Hungarian pension system in transition', Social Protection Discussion Paper no. 9805, World Bank, Washington, D.C.

— and Whitehouse, E.R. (1998), 'Individual choice and the transition to a funded pension system', Social Protection Discussion Paper no. 9812, World Bank, Washington, D.C.

Queisser, M. (1999), 'Second-generation pension reforms in Latin America', Social Protection Discussion Paper, forthcoming, World Bank, Washington, D.C.

Sunden, A. (1999), 'The Swedish pension reform', Social Protection Discussion Paper, forthcoming, World Bank, Washington, D.C.

Whitehouse, E.R. (1996), 'Implementing in-work benefits in different labour markets', *Economic Journal,* vol. 106, pp. 129-141.

— (1997*a*), 'Finance Bill: seeds of controversy lie buried in the detail', *Financial Times,* 4 January.

— (1997*b*), 'Paying credit to the workers: careful decisions needed on topping up low earnings', *Financial Times,* 13 May.

— (1998), 'Pension reform in Britain', Social Protection Discussion Paper no. 9810, World Bank, Washington, D.C.

World Bank (1999), 'Notional accounts: the role of notional defined contribution plans in pension reform', Pension Reform Primer Note, forthcoming, World Bank, Washington, D.C.

Social Protection Discussion Paper Series

No.	Title
9801	World Bank Lending for Labor Markets: 1991 to 1996
9802	Export Processing Zones: A Review in Need of Update
9803	Building an Environment for Pension Reform in Developing Countries
9804	Risks in Pensions and Annuities: Efficient Designs
9805	The Hungarian Pension System in Transition
9806	Government Guarantees on Pension Fund Returns
9807	A World Bank Perspective on Pension Reform
9808	Women and Labor Market Changes in the Global Economy: Growth Helps, Inequalities Hurt and Public Policy Matters
9809	Financing the Transition to Multipillar
9810	Pension Reform in Britain
9811	An Alternative Technical Education System: A Case Study of Mexico
9812	The Role of Choice in the Transition to a Funded Pension System
9813	Unemployment Benefits
9814	Family Allowances
9815	The Quest for Pension Reform: Poland's Security through Diversity
9816	Getting an Earful: A Review of Beneficiary Assessments of Social Funds
9817	Supervising Mandatory Funded Pension Systems: Issues and Challenges
9901	Active Labor Market Programs: A Review of the Evidence from Evaluations
9902	World Bank Lending for Labor Markets: 1991 to 1998
9903	A Bundle of Joy or an Expensive Luxury: A Comparative Analysis of the Economic Environment for Family Formation in Western Europe
9904	Social Protection as Social Risk Management: Conceptual Underpinnings for the Social Protection Sector Strategy Paper
9905	The Effects of Legislative Change on Female Labour Supply: Marriage and Divorce, Child and Spousal Support, Property Division and Pension Splitting

Social Protection Discussion Paper Series continued

No.	Title
9906	Optimal Unemployment Insurance: A Guide to the Literature
9907	Collecting and Transferring Pension Contributions

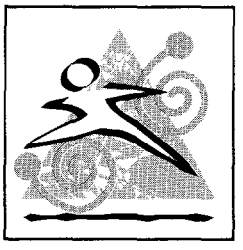

Summary Findings

Collecting social security contributions is an important operational issue in all types of pension system. Many regimes are plagued by poor compliance and weak, inefficient administration. Some countries have tried to introduce an automatic incentive to contribute by moving systems closer to 'actuarial fairness', where pension benefits are more strictly related to individual contributions. Examples include the systems of individual accounts introduced in a range of countries in Latin America and Eastern Europe. But in these regimes, collecting and transferring contributions is a more complex process.

This paper considers different aspects of the process of collecting pension contributions. In Section 1, we describe the most serious problems affecting collection systems in several countries. Section 2 presents the conceptual relationships between alternative pension-system models and collection systems. Section 3 deals with the differences between centralised and decentralised collection systems and their advantages and disadvantages. Section 4 looks at operational issues. Section 5 compares experience of collection systems in a range of different countries. Section 6 looks at problems of regulation and supervision, while the final section concludes.

HUMAN DEVELOPMENT NETWORK